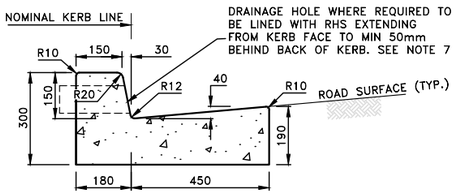

150mm INTEGRAL KERB & GUTTER

NOT TO SCALE

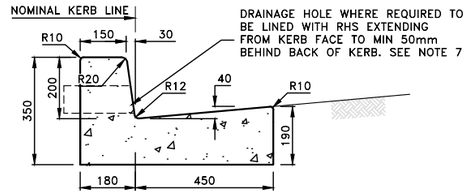

200mm INTEGRAL KERB & GUTTER

NOT TO SCALE

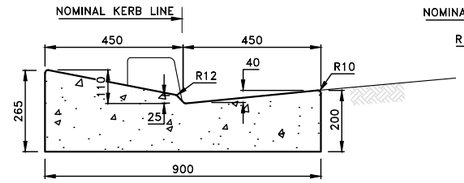

DRIVEWAY LAYBACK

NOT TO SCALE

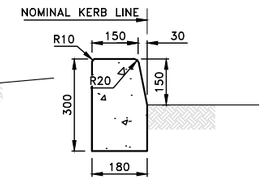

KERB ONLY

NOT TO SCALE

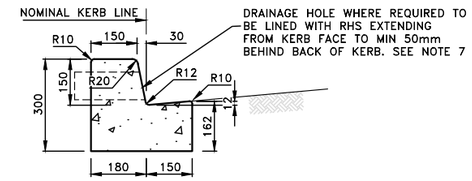

150mm INTEGRAL KERB & 150mm GUTTER

NOT TO SCALE

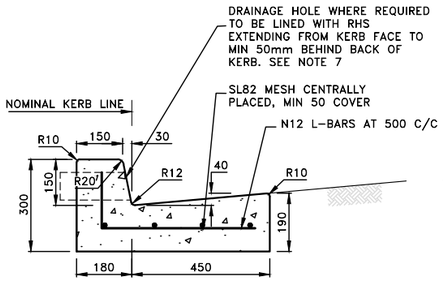

150mm INTEGRAL REINFORCED KERB & GUTTER

NOT TO SCALE

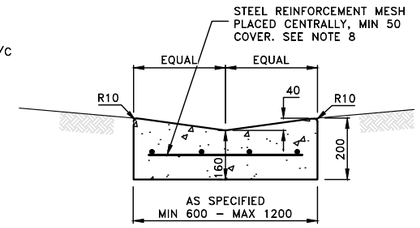

REINFORCED DISH CROSSING

NOT TO SCALE

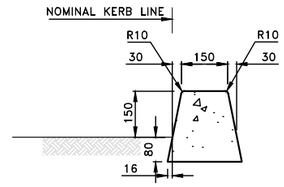

BARRIER KERB–TYPE 1 (KEYED IN)

NOT TO SCALE

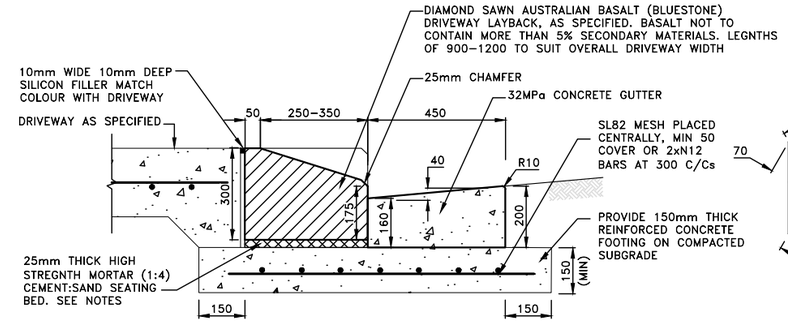

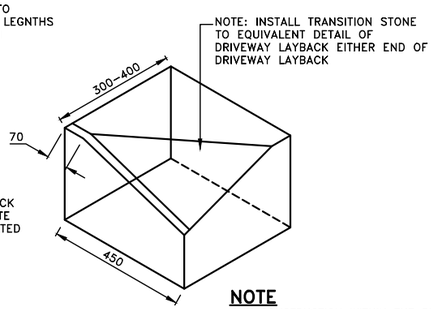

BLUESTONE DRIVEWAY LAYBACK

NOT TO SCALE

NOTE

ANY CONSTRUCTION WITHIN THE PUBLIC DOMAIN REQUIRES COUNCIL APPROVAL. NON–APPROVED WORKS AND STRUCTURES MAY BE REQUIRED TO BE REMOVED AND THE EXISTING REINSTATED AT THE CONTRACTORS OR DEVELOPERS COST.

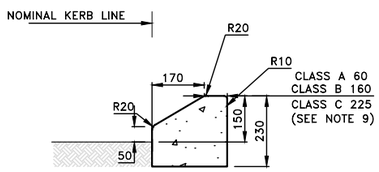

MOUNTABLE KERB–TYPE 1 (KEYED IN)

NOT TO SCALE

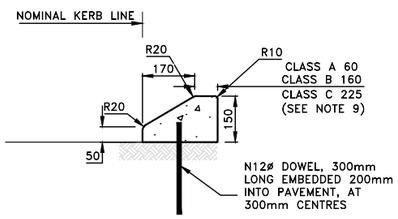

MOUNTABLE KERB–TYPE 2 (DOWELED)

NOT TO SCALE

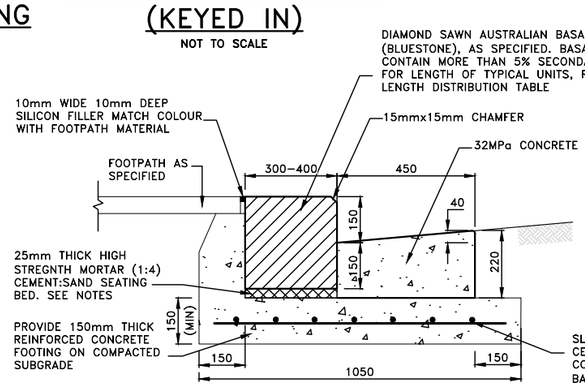

BLUESTONE KERB & CONCRETE GUTTER DETAILS

NOT TO SCALE

BLUESTONE KERB UNITS LENGTH DISTRIBUTION TABLE

SEGMENT LENGTH	% OF TOTAL LENGTH OF WORK
600 – 800 (mm)	20 MAX
800 – 1000 (mm)	25 MAX
1000 – 1250 (mm)	55 MIN

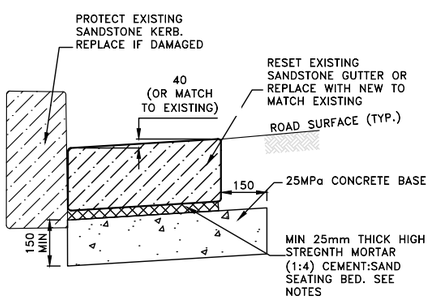

SANDSTONE GUTTER RESETTING DETAIL

NOT TO SCALE

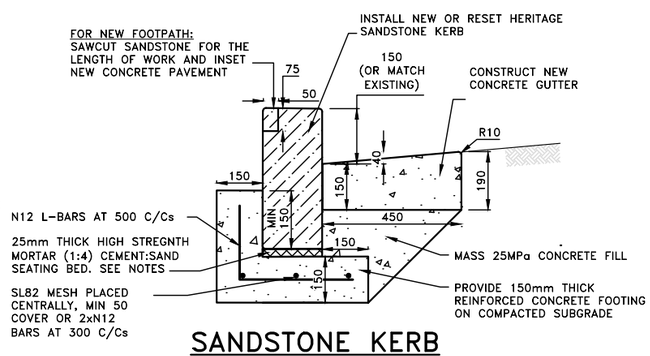

SANDSTONE KERB RESETTING DETAIL (WITH CONCRETE GUTTER)

NOT TO SCALE

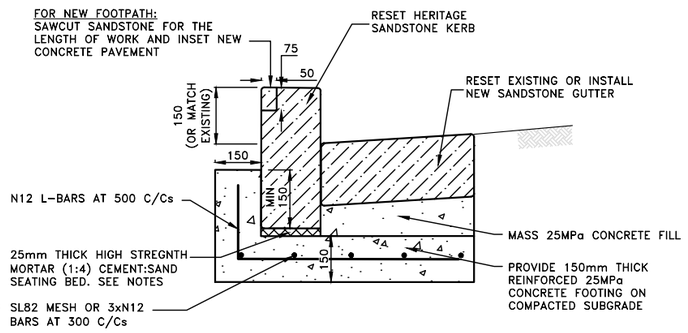

SANDSTONE KERB RESETTING DETAIL (WITH SANDSTONE GUTTER)

NOT TO SCALE

NOTES

1. THE WORKS SHALL COMPLY WITH THE CURRENT AND RELEVANT AUSTRALIAN STANDARDS AND TfNSW TECHNICAL DIRECTIONS AND GUIDELINES, UNLESS INSTRUCTED OTHERWISE BY THE COUNCIL DELEGATE.
2. DESIGN AND CONSTRUCTION OF WORKS INCLUDING KERBS, GUTTERS, VEHICULAR CROSSINGS, KERB RAMPS, STORMWATER INFRASTRUCTURE, AND THE LIKE, ON STATE ROADS TO BE APPROVED BY TfNSW AND TO THE SATISFACTION OF THE COUNCIL DELEGATE.
3. ROAD BASE TO BE EXTENDED BENEATH KERBS, GUTTERS, APRONS AND DISH CROSSINGS. 150mm THICK RECYCLED COMPACTED DGB20 OR 150mm THICK LEAN MIX CONCRETE, COMPACTED TO 98% S.D.D.
4. CONCRETE TO BE OF 32MPa COMPRESSIVE STRENGTH AT 28 DAYS FOR KERBING AND GUTTERING, LAYBACKS, VEHICULAR CROSSINGS AND MISCELLANEOUS KERBING AND EDGE STRIP.
5. ALL EDGES SHALL BE TOOL FINISHED WITH 12mm RADIUS 50mm WIDE EDGING TOOL.
6. CONCRETE FINISH FOR KERBS, GUTTERS, APRONS AND CROSSINGS TO BE STEEL TROWEL.
7. PROPERTY STORMWATER OUTLET TO BE 125x75x4 RHS, OR TO SUIT EXISTING, MAINTAINING GRAVITY TO FALL TO K&G. INVERT OF OUTLET TO BE LEVEL WITH INVERT OF GUTTER AND MIN 200mm FROM END OF DRIVEWAY OR KERB RAMP LAYBACK.
8. –CLASS A (L/D) RESIDENTIAL DRIVEWAYS 100mm THICK / SL72 MESH
   –CLASS B (H/D) MEDIUM DENSITY (VILLAS/TOWNHOUSES)150mm THICK / SL82 MESH
   –CLASS C COMMERCIAL & INDUSTRIAL 200mm THICK / SL102 MESH
9. –CLASS A RESIDENTIAL USE
   –CLASS B GARDEN BEDS
   –CLASS C MEDIUM DENSITY (VILLAS/TOWNHOUSES), COMMERCIAL & INDUSTRIAL ZONES
10. THE CONCRETE IS TO USE TYPE A PORTLAND CEMENT AND IS NOT TO BE ARTIFICIALLY COLOURED, STENCILLED, STAMPED OR PATTERNED.
11. ALL REINFORCEMENT TO BE HOT DIP GALVANISED TO AS4671 WITH MINIMUM 50 COVER.
12. RE–SHEET MINIMUM 600mm WIDTH OF DEEP LIFT PAVEMENT AND A FURTHER 150mm WIDTH OF AC10 WEARING COARSE ADJACENT NEW KERB, GUTTER, DISH CROSSINGS OR LAYBACKS. REFER TO STANDARD DETAIL R6 FOR FURTHER DETAIL.
13. EXCAVATION SHALL BE SAWN ALONG ALL EDGES.
14. CONTRACTOR TO OBTAIN & LOCATE ALL SERVICES PRIOR TO WORKS COMMENCING. UTILITY SERVICE COVERS ARE TO BE ADJUSTED TO SUIT DESIGN FINISHED SURFACE LEVELS. UTILITY COVERS TO BE CLASS D OR EQUIVALENT, OR AS SPECIFIED BY UTILITY ASSET OWNER.
15. COUNCIL'S DELEGATE TO INSPECT FOR ALL UNSOUND AREAS BEFORE PROFILING AC PAVEMENT AND AFTER PROOF ROLLING. WEAK SECTIONS ARE TO BE IDENTIFIED AND HEAVY–PATCHED TO A NOMINAL THICKNESS OF 150mm WITH AC28 BEFORE RESEALING IN ACCORDANCE TO TYPICAL CROSS–SECTION.
16. UNLESS SPECIFIED, OVERLAY TO CONSIST OF 50mm THICK AC10.
17. UNLESS SPECIFIED, CRACK SEALANT FOR FLEXIBLE PAVEMENT TO BE BITULASTIC BITUFLEX OR APPROVED EQUIVALENT.
18. UNLESS SPECIFIED, CRACK SEALANT FOR RIGID PAVEMENT TO BE "DOW CORNING 888" OR APPROVED EQUIVALENT.
19. UNLESS SPECIFIED, MORTAR BED TO BE MIN 25mm HIGH STREGNTH (1:4) CEMENT:SAND WITH LATEX ADDITIVE TO INCREASE BOND STREGNTH AND COMPRESSIVE STREGNTH.
20. LEVELS FOR REINSTATEMENT WORKS TO MATCH EXISTING, UNLESS INSTRUCTED OTHERWISE BY THE COUNCIL DELEGATE.
21. INSPECTIONS ARE REQUIRED AT THE FOLLOWING STAGES AND AS OTHERWISE DIRECTED BY THE COUNCIL DELEGATE. DO NOT CONTINUE UNTIL APPROVAL RECEIVED FROM COUNCIL DELEGATE.

    ROAD PAVEMENT
    - A) SUBGRADE TRIMMED AND CONSOLIDATED PRIOR TO FIRST PAVEMENT COURSE. (NOTE: SINGLE AXLE TRUCK WITH 8t LOAD TO BE AVAILABLE FOR PAVEMENT TEST).
    - B) EACH PAVEMENT LAYER SPREAD AND COMPACTED. (NOTE: SINGLE AXLE TRUCK WITH 8t LOAD TO BE AVAILABLE FOR PAVEMENT TEST).
    - C) PAVEMENT COMPLETED PRIOR TO SEALING.

    CONCRETE WORKS
    - A) SUBGRADE TRIMMED AND CONSOLIDATED.
    - B) EXCAVATION COMPLETED, FORMWORK AND REINFORCEMENT SET.
    - C) CONCRETE FORMED AND CURED.
22. CONTRACTOR TO SUPPLY AND LAY TURF TO AREA AFFECTED BY PROPOSED WORKS OR AS DIRECTED BY THE COUNCIL DELEGATE.
    - THE SPECIES OF TURF TO BE "SOFT LEAF SHADEMASTER BUFFALO" UNLESS DIRECTED OTHERWISE
    - THE TURF SHOULD BE PLACED ON A MINIMUM 100mm DEEP LAYER OF IMPORTED TURF UNDERLAY TOPSOIL
    - SUBSOIL SHOULD BE CULTIVATED TO A MINIMUM DEPTH OF 100mm
    - IRRIGATE THE TURF TWICE A WEEK FOR 12 WEEKS
23. FOR TURFING NOTES REFER TO WAVERLEY COUNCIL STANDARD DRAWING R18.
24. MATCH NEW PAVEMENT NEATLY AND FLUSH WITH EXISTING.
25. ALL DIMENSIONS ARE IN MILLIMETERS UNLESS OTHERWISE SHOWN.

ISSUE	ISSUE DESCRIPTION	DATE	DRN	DES	VER	ISSUE	ISSUE DESCRIPTION	DATE	DRN	DES	VER
A	ORIGINAL ISSUE	11/10/24	AM	AM	NZ						

BEFORE YOU DIG www.byda.com.au

SURVEYED BY: N/A
DATE: N/A
COORDINATION: N/A
DATUM: N/A

WAVERLEY COUNCIL
CIVIL DESIGN, MAJOR PROJECTS
Level 1, 87-99 Oxford Street, Bondi Junction, NSW, 2022
PO Box 9, Bondi Junction NSW 1355
Tel. (02) 9083 8000
Email: info@waverley.nsw.gov.au
Web: www.waverley.nsw.gov.au

APPROVED:
DATE SIGNED:
SCALE AS SHOWN @ A3:
PLAN: HORIZ: - HORIZ: -
LONG-SECTION VERT: - CROSS-SECTION VERT: -

Project Name: STANDARD DRAWING - ROADS - R1
Drawing Title: KERB PROFILES
PROJ No: WC STD DRW
TRIM No: XXXX
Drawing No: R1
Issue: A