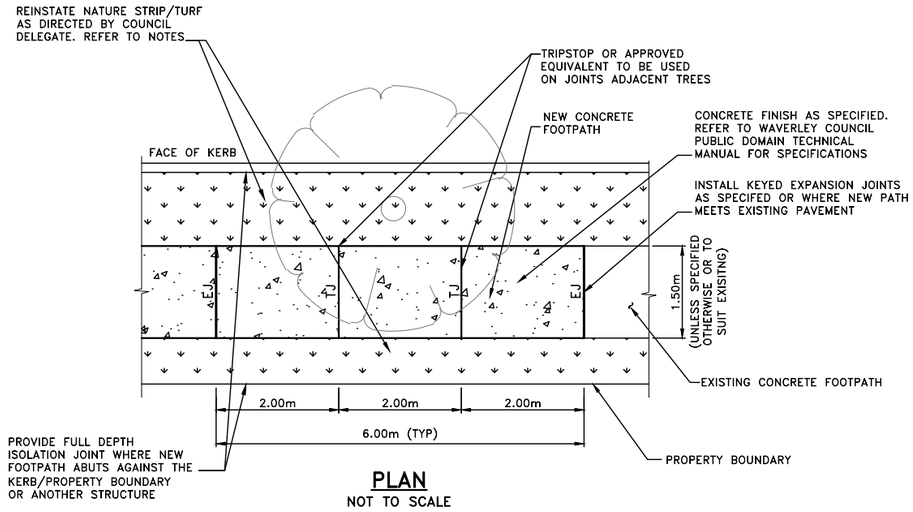

PLAN
NOT TO SCALE

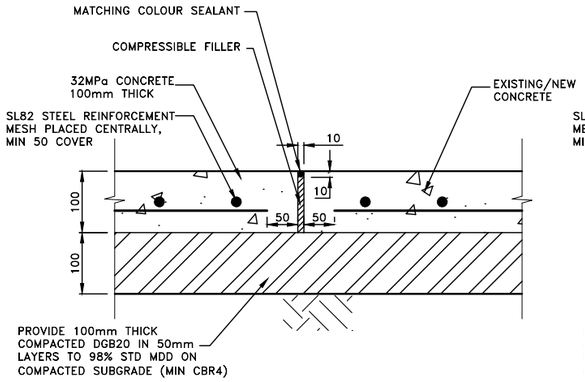

ISOLATION JOINT
NOT TO SCALE

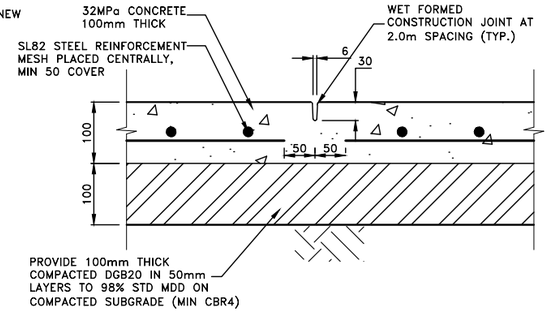

TOOL JOINT
NOT TO SCALE

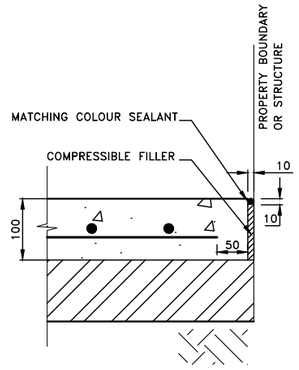

ISOLATION JOINT AT BOUNDARY OR STRUCTURE
NOT TO SCALE

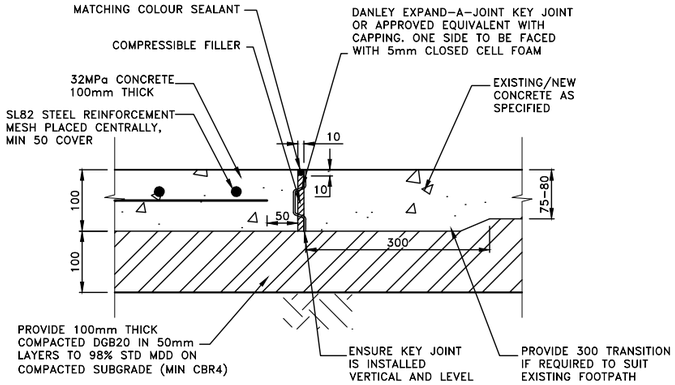

KEYED EXPANSION JOINT
NOT TO SCALE

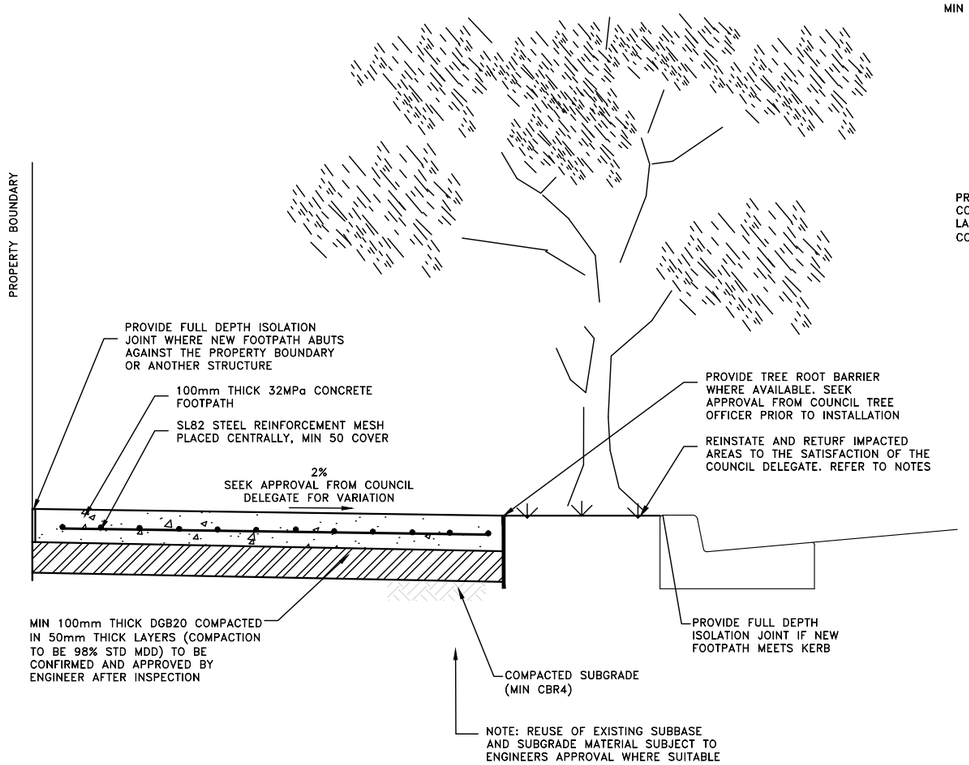

TYPICAL SECTION
NOT TO SCALE

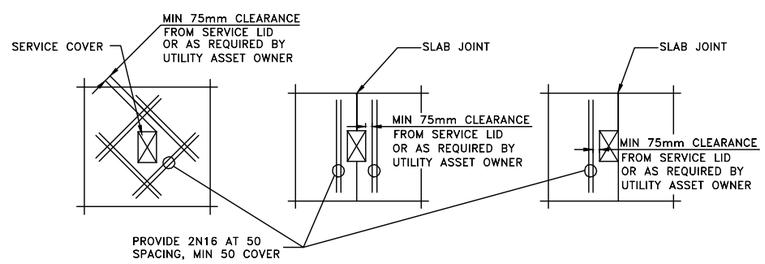

TRIMMER BARS AT SERVICE PITS AND LID COVERS
NOT TO SCALE

LEGEND

TJ	TOOL JOINT
EJ	EXPANSION JOINT
IJ	ISOLATION JOINT

NOTE
REFER TO WAVERLEY COUNCIL PUBLIC DOMAIN TECHNICAL MANUAL FOR FURTHER FOOTPATH PAVEMENT SPECIFICATIONS AND DETAILS

NOTES

1. THE WORKS SHALL COMPLY WITH THE CURRENT AND RELEVANT AUSTRALIAN STANDARDS AND TfNSW TECHNICAL DIRECTIONS AND GUIDELINES, UNLESS INSTRUCTED OTHERWISE BY THE COUNCIL DELEGATE.
2. CONCRETE TO BE OF 32MPa COMPRESSIVE STRENGTH AT 28 DAYS. UNLESS SPECIFIED OTHERWISE, AGGREGATE TO BE BLUEMETAL 10mm TO 14mm.
3. CONCRETE TO BE FINISHED AS PER THE SPECIFICATIONS IN WAVERLEY COUNCIL PUBLIC DOMAIN TECHNICAL MANUAL, OR AS APPROVED BY THE COUNCIL DELEGATE.
4. ALL REINFORCEMENT TO BE HOT DIP GALVANISED TO AS4671 WITH MINIMUM 50 COVER.
5. LEVEL AT BUILDING ALIGNMENT IS TO COMPLY WITH LEVELS ISSUED IN THE DEVELOPMENT CONSENT, UNLESS OTHERWISE STATED BY THE COUNCIL DELEGATE.
6. LEVELS FOR REINSTATEMENT WORKS TO MATCH EXISTING, UNLESS INSTRUCTED OTHERWISE BY THE COUNCIL DELEGATE.
7. FOOTPATH CROSS FALL TO BE MAXIMUM 2% AND MINIMUM 1%. SEEK APPROVAL FROM COUNCIL DELEGATE FOR FALLS OUTSIDE OF THIS RANGE.
8. MAXIMUM LONGITUDINAL GRADE OF 5%, UNLESS DIRECTED OTHERWISE BY COUNCIL DELEGATE.
9. EXCAVATION ON FOOTPATHS SHALL BE FROM EXISTING JOINTS IN THE PAVEMENT IF AVAILABLE, OR SAWN ALONG ALL EDGES.
10. CONTRACTOR TO OBTAIN & LOCATE ALL SERVICES PRIOR TO WORKS COMMENCING. UTILITY SERVICE COVERS ARE TO BE ADJUSTED TO SUIT DESIGN FINISHED SURFACE LEVELS. UTILITY COVERS TO BE CLASS D OR EQUIVALENT, OR AS SPECIFIED BY UTILITY ASSET OWNER.
11. CONTRACTOR TO ENSURE A 500x500mm EXCLUSION ZONE IS PROVIDED AROUND ALL POWER POLES. NO CONCRETE TO BE POURED IN EXCLUSION ZONE. EXCLUSION ZONE TO BE FILLED WITH ASPHALT COLD MIX ONLY.
12. EXISTING PLAQUES OR STATE SURVEY MARKERS ARE NOT TO BE REMOVED PRIOR TO CONSULTING WITH THE COUNCIL DELEGATE.
13. PROTECT ALL EXISTING TREES AND TREE ROOTS. NOTIFY THE COUNCIL DELEGATE AND TREE OFFICER PRIOR TO PRUNING.
14. KEYED EXPANSION JOINTS TO BE INSTALLED WHERE ADJACENT TREES OR TREE ROOTS, AND AS DIRECTED BY THE COUNCIL DELEGATE.
15. COUNCIL'S DELEGATE TO INSPECT FOR ALL UNSOUND AREAS BEFORE POURING CONCRETE PAVEMENT. WEAK SECTIONS ARE TO BE IDENTIFIED AND RECTIFIED TO A NOMINAL THICKNESS OF 200mm WITH DGB20 BEFORE RECOMPACTING IN ACCORDANCE TO TYPICAL CROSS-SECTION.
16. UNLESS SPECIFIED, SEALANT TO BE SILKAFLEX PRO, OR APPROVED EQUIVALENT.
17. INSPECTIONS ARE REQUIRED AT THE FOLLOWING STAGES AND AS OTHERWISE DIRECTED BY THE COUNCIL DELEGATE. DO NOT CONTINUE UNTIL APPROVAL RECEIVED FROM COUNCIL DELEGATE.
    CONCRETE WORKS
    A) SUBGRADE TRIMMED AND CONSOLIDATED.
    B) EXCAVATION COMPLETED, FORMWORK AND REINFORCEMENT SET.
    C) CONCRETE FORMED AND CURED.
18. PROVIDE EXPANSION JOINTS AS APPROPRIATE BUT SPACED NOT MORE THAN 6m AND TOOL JOINTS EVERY 2.0m, OR AS SPECIFIED. JOINTS SHALL BE STRAIGHT, CONTINUOUS AND NORMAL TO BOUNDARIES AND EDGES. PROVIDE FULL DEPTH EXPANSION JOINTS TO BOUNDARIES, STRUCTURES, KERBS, EDGES AND THE LIKE.
19. CONTRACTOR TO SUPPLY AND LAY TURF TO AREA AFFECTED BY PROPOSED WORKS OR AS DIRECTED BY THE COUNCIL DELEGATE.
    - THE SPECIES OF TURF TO BE "SOFT LEAF SHADEMASTER BUFFALO" UNLESS DIRECTED OTHERWISE
    - THE TURF SHOULD BE PLACED ON A MINIMUM 100mm DEEP LAYER OF IMPORTED TURF UNDERLAY TOPSOIL
    - SUBSOIL SHOULD BE CULTIVATED TO A MINIMUM DEPTH OF 100mm
    - IRRIGATE THE TURF TWICE A WEEK FOR 12 WEEKS, OR AS INSTRUCTED BY THE COUNCIL DELEGATE
20. FOR TURFING NOTES REFER TO WAVERLEY COUNCIL STANDARD DRAWING R18.
21. PROPERTY STORMWATER OUTLET TO BE 125x75x4 RHS, OR TO SUIT EXISTING, MAINTAINING GRAVITY TO FALL TO K&G. INVERT OF OUTLET TO BE LEVEL WITH INVERT OF GUTTER AND MIN 200mm FROM END OF DRIVEWAY OR KERB RAMP LAYBACK.
22. MATCH NEW PAVEMENT NEATLY AND FLUSH WITH EXISTING.
23. ALL DIMENSIONS ARE IN MILLIMETERS UNLESS OTHERWISE SHOWN.

ISSUE	ISSUE DESCRIPTION	DATE	DRN	DES	VER	ISSUE	ISSUE DESCRIPTION	DATE	DRN	DES	VER
A	ORIGINAL ISSUE	11/10/24	AM	AM	NZ						

BEFORE YOU DIG www.byda.com.au

SURVEYED BY: N/A
DATE: N/A
COORDINATION: N/A
DATUM: N/A

WAVERLEY COUNCIL

CIVIL DESIGN, MAJOR PROJECTS
Level 1, 87-99 Oxford Street, Bondi Junction, NSW, 2022
PO Box 9, Bondi Junction NSW 1355
Tel. (02) 9083 8000
Email: info@waverley.nsw.gov.au
Web: www.waverley.nsw.gov.au

APPROVED:
DATE SIGNED:
SCALE AS SHOWN @ A3:
PLAN:
LONG-SECTION HORIZ: - VERT: -
CROSS-SECTION HORIZ: - VERT: -

Project Name: STANDARD DRAWING - ROADS - R16
PROJ No: WC STD DRW
TRIM No: XXXX
Drawing Title: REINFORCED CONCRETE FOOTPATH
Drawing No: R16
Issue: A